GE Consumer & Industrial
Power Protection

# Product description

## Digital Energy™ Uninterruptible Power Supply

Line interactive rackmountable
Match 19” UPS
700 - 1000 - 1500 - 2200 - 3000 VA

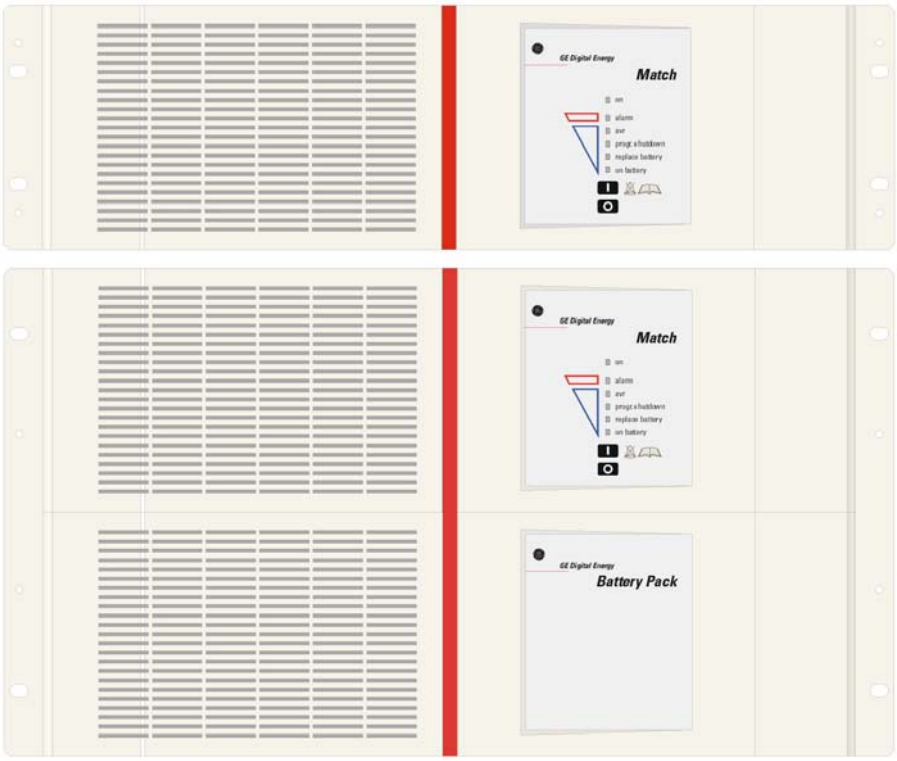


GE imagination at work

Certified
Quality System
ISO 9001
Reg.No.CSQ 9130.GELE

Contents:


1. Introduction ..... 2

2. Functional explanation ..... 2
   - 2.1 Principles of operation
   - 2.2 Normal conditions
   - 2.3 Mains failure

3. External description ..... 3
   - 3.1 Front and rear panel
   - 3.2 Enclosure
   - 3.3 Dimensions
   - 3.4 Weight

4. Electrical specifications ..... 5
   - 4.1 Ratings
   - 4.2 Input
   - 4.3 Output
   - 4.4 General design criteria

5. Performance characteristics ..... 6
   - 5.1 Efficiency
   - 5.2 Environment
   - 5.3 Runtimes
   - 5.4 Standard features

6. Communicationsport: ComConnect ..... 8
   - 6.1 Principles of operation
   - 6.2 Pin functions

7. Batteries ..... 8

8. Options ..... 9
   - 8.1 SNMP interface card
   - 8.2 Relay interface card
   - 8.3 Longer runtimes (2200-3000 VA)
   - 8.4 DC extension cables

9. Transport / storage ..... 10



© **General Electric**. Data subject to change without prior notice. All brands and product names are Trademarks or Registered Trademarks of their respective owners. Reproduction only upon written consent by GE.

# 1 - Introduction

The **GE (General Electric) Digital Energy™ Match 19" UPS series** is a compact, modern, line-interactive system which incorporates the most advanced power electronics technology to provide exceptional protection for electrical equipment.

Each Digital Energy UPS is thoroughly tested and conforms within tolerance to the following specifications. (Data are mean values and are subject to change without notice.) Information applies to all models unless otherwise specified.

# 2 - Functional explanation

## 2.1 Principles of operation

The Match 19" UPS stores electric energy in batteries housed in the unit. This allows the UPS to supply output power even when the incoming mains power is cut off completely.
Energy is stored as Direct Current (DC), while input and output energy must be Alternating Current (AC). Therefore the UPS contains a rectifier (to convert from AC to DC) and an inverter (to change energy from DC to AC). (See fig.1)

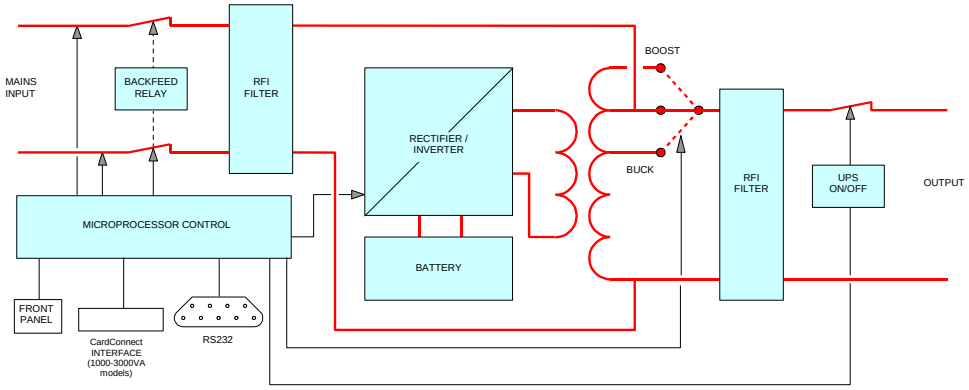


*Figure 1 Block diagram of the Match 19" UPS*

## 2.2 Normal conditions

Under normal input conditions (see section 4.2) the load is supplied by the mains through a bypass circuit. Filtering capabilities guard against surges, spikes and high frequency interferences. The mains current also keeps the battery fully charged
The input voltage window is extremely wide: as long as the input voltage is between 165 – 275 Vac (Match 19" 700-1500) or even between 140 – 305 Vac (Match 19" 2200-3000), the Automatic Voltage Regulation (AVR) guarantees an output voltage that is between 190 - 254 Vac and acceptable for every modern ICT device.

## 2.3 Mains failure

In the event of a mains power failure (i.e. absent or outside tolerance) the backfeed relay is opened and the load is supplied by the energy reserve stored in the battery. DC voltage from the batteries is transferred to the inverter which produces AC voltage for the load.
The transfer time is 4 milliseconds, sufficiently short for computers which therefore will continue to operate without interruption.
In the event of an extended mains failure, the inverter will stop when the battery energy has been used up. At this point, the UPS is no longer able to power the connected equipment.
When the mains is re-established within tolerance, the load will be supplied again by the mains and the batteries will be recharged, making them ready to support future power failures.

# 3 - External description

## 3.1 Front and rear panel

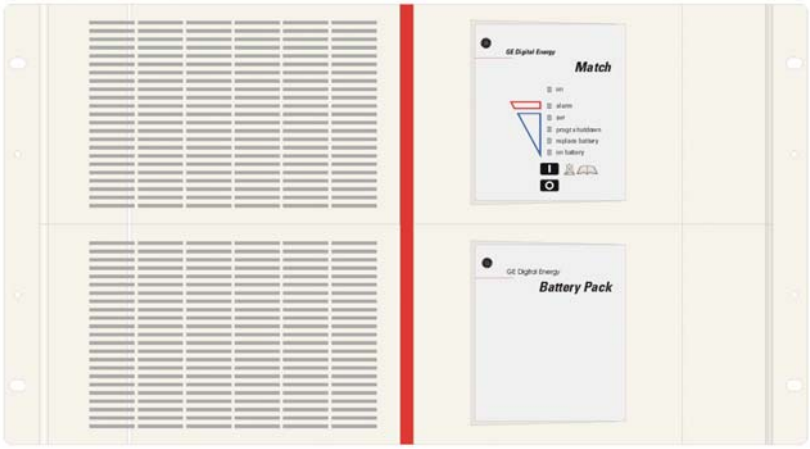


*Figure 2 Front panel of Match 19" 2200-3000*

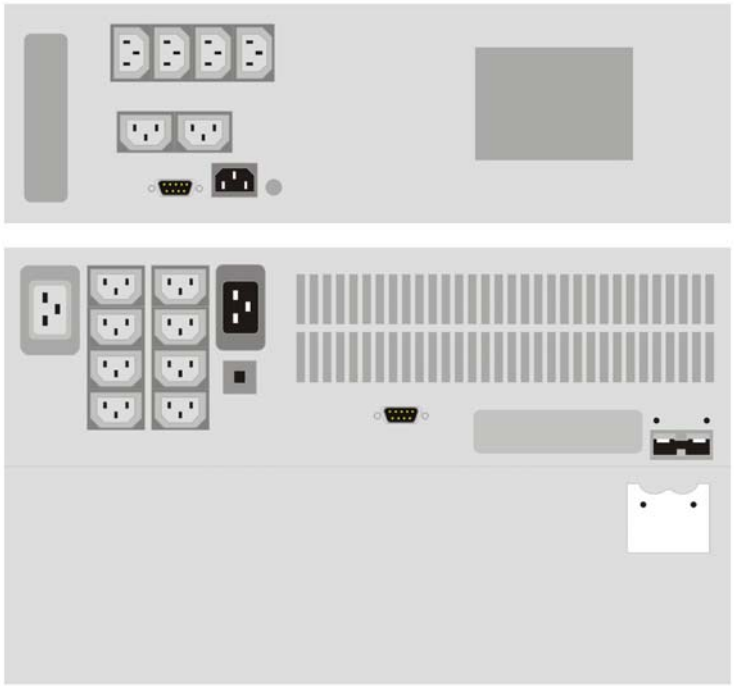

*Figure 3 Rear panels Match 19" 700-1500 (top) and Match 19" 2200-3000 (bottom)*

**FRONT**

| | | |
|---|---|---|
| On | : | green LED |
| Alarm | : | red LED |
| AVR | : | yellow LED |
| Progr.shutdown | : | yellow LED |
| Replace batt. | : | yellow LED |
| On battery | : | yellow LED |
| Push-buttons | | |

**REAR**

| | | |
|---|---|---|
| ComConnect | : | 9-pin Sub-D male |
| Input socket | : | IEC 320 C14 male* |
| | | IEC 320 C20 male** |
| Output sockets (6/8) | : | IEC 320 C13 10A female |
| | | IEC 320 C19 16A female** |
| Input fuse | : | IEC Ø5x20* |
| | | TCB thermal circuit breaker** |
| CardConnect Slot | : | for optional SNMP or relay card |
| | | (not for Match 19" 700 VA) |
| DC connector** | | |

* = Match 19" 700-1500 / ** = Match 19" 2200/3000

## 3.2 Enclosure

| | | |
|---|---|---|
| 700-1500VA | : | CF 34 |
| 2200-3000VA | : | CF 64 |
| Battery module | : | CF 34 |
| Construction | : | steel - plastic |
| Colour | : | RAL 7035 (light grey) |
| Protection | : | IP 20 |
| Packaging | : | recycleable, rugged |

## 3.3 Dimensions

Cabinet dimensions (h x w x d)

| | | |
|---|---|---|
| 700-1500VA (hxwxd, mm) | : | 133.5 (3HU) x 450 (19") x 440 |
| 2200-3000VA (hxwxd, mm) | : | 267 (6HU) x 450 (19") x 440 |
| Depth required in 19" rack | : | 420 (without connectors) |
| Battery module | : | 133.5 (3HU) x 450 (19") x 440 |

Shipping dimensions (hxwxd, mm)

| | | |
|---|---|---|
| 700-1500VA and battery module | : | 255 x 550 x 550 |
| 2200-3000VA* | : | 635 x 560 x 560 |

* The Match 19" 2200/3000 are shipped with 2 separately packed battery drawers on one pallet.

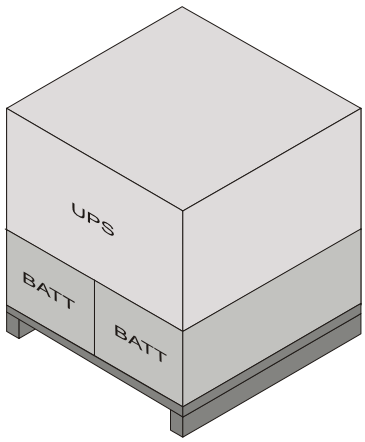


## 3.4 Weight

| **Match 19" model** | | **:** | **700** | **1000** | **1500** | **2200** | **3000** |
|---|---|---|---|---|---|---|---|
| Weight without battery drawer (kg) | | : | 14 | 15 | 15 | 31 | 33 |
| Weight with battery drawer (kg) | | : | 19 | 22 | 26 | 50 | 57 |
| Shipping weight (kg) | | : | 23 | 26 | 30 | 58 | 65 |

Battery module for Match 2k2/3k:

| | | | |
|---|---|---|---|
| Weight (kg) | 36V/14AH | : | 26 |
| | 48V/14Ah | : | 30 |
| Shipping weight (kg) | 36V/14AH | : | 29 |
| | 48V/14Ah | : | 33 |

# 4 - Electrical specifications

| **Match 19" model** | : | **700** | **1000** | **1500** | **2200** | **3000** |
|---|---|---|---|---|---|---|

## 4.1 Ratings

| | | | | | | |
|---|---|---|---|---|---|---|
| Voltage Amperes (VA) with computer type load | : | 700 | 1000 | 1500 | 2200 | 3000 |
| Watts (W) | : | 420 | 600 | 900 | 1540 | 2100 |

Ratings are for units with standard runtime. For ratings at extended runtime see 8.4.

## 4.2 Input

| | | | | | | |
|---|---|---|---|---|---|---|
| AC input voltage | : | 220 - 240 V | | | | |
| AC input voltage window | | | | | | |
| Match 500-1500 | : | 165 - 275 V, mains operation | | | | |
| Match 2200-3000 | : | 140 - 305 V, mains operation (if Iin < 16A) | | | | |
| Max. AC input voltage | : | 350V, battery operation above 275V (Match 19" 700-1500)<br>350V, battery operation above 305V (Match 19" 2200-3000) | | | | |
| Minimum start-up AC voltage | : | 187V (at any load) | | | | |
| Input frequency | : | 50 Hz or 60 Hz | | | | |
| Input frequency range | : | nominal ± 5 Hz | | | | |
| Typical no-load power consumption, normal operation (W) | : | 7 | 12 | 12 | 15 | 15 |
| Max. AC input current (A) | : | 4.0 | 6.0 | 8.0 | 12.0 | 16.0 |
| AC input fuse / TCB* (A) | : | 5.0 | 10 | 10 | 16* | 16* |

## 4.3 Output

| | | |
|---|---|---|
| AC output voltage | : | 230 V nominal (suitable for 220-240 V loads) |
| AC output voltage tolerance | : | 190-254 V (230V ± 2% when operating on battery) |
| Output frequency | : | 50 Hz or 60 Hz, autosensing<br>in case of battery start: equal to last input frequency |
| Output frequency stability | : | < ± 0.1 Hz (battery operation) |
| Output waveform | : | sine wave |
| Crest factor handling | : | up to 6:1 |
| Power factor | : | 0.6 (0.7 at 90% load) (Match 19" 700-1500) |
| | : | 0.7 (Match 19" 2200-3000) |
| Buck/boost voltage regulation | : | at specified input voltage window, the output voltage varies between 190-254Vac |

| | | | | | **Match 19"** | |
|---|---|---|---|---|---|---|
| | | | | | **700-1500** | **2200-3000** |
| Transfer/reverse transfer voltages | : | normal | ⇔ | boost | 202 / 215 | 207 / 217 |
| | | boost | ⇔ | super boost | n.a. | 172 / 182 |
| | | normal | ⇔ | buck | 254 / 240 | 265 / 255 |
| | | boost | ⇔ | battery | 165 / 175 | 140 / 150 |
| | | buck | ⇔ | battery | 275 / 265 | 305 / 295 |
| Transfer time | : | typically 4 ms. | | | | |

## 4.4 General design criteria

| | | |
|---|---|---|
| Safety | : | EN 50091-1-1 (EN 60950, IEC 950) |
| Electromagnetic compatibility | : | EN 50091-2 (EN 50081-1 + EN 50082-1) |

Note: The UPS is intended for use in normal domestic and office situations

# 5 - Performance characteristics

| **Match 19" model** | : | **700** | **1000** | **1500** | **2200** | **3000** |
|---|---|---|---|---|---|---|

## 5.1 Efficiency (battery fully charged)

| | | | | | | |
|---|---|---|---|---|---|---|
| On mains | : | typical 98% | | | | |
| On battery | : | typical 82% | | | | |
| Max heat output @ 100% load, mains operation (W/h) | : | 8.5 | 12.3 | 18.3 | 25 | 36.7 |

## 5.2 Environment

| | | |
|---|---|---|
| Ambient temperature | : | -10 to 40°C |
| Audible noise at 1 meter | : | less than 45 dB(A), load and temperature dependent |
| Max. relative humidity | : | 95% (non-condensing) |

## 5.3 Runtimes (ratings given for 25 °C)

| | runtime in minutes | | | | |
|---|---|---|---|---|---|
| At typical UPS load (75%) | 11 | 12 | 14 | 8 | 7 |
| Watts* | | | | | |
| 60 | 77 | 106 | 185 | 237 | 308 |
| 180 | 23 | 38 | 69 | 83 | 112 |
| 300 | 11 | 21 | 40 | 49 | 66 |
| 420 | 6 | 14 | 27 | 33 | 46 |
| 600 | - | 8 | 18 | 22 | 31 |
| 900 | - | - | 9 | 12 | 19 |
| 1540 | - | - | - | 5 | 8 |
| 2100 | - | - | - | - | 5 |

* max. power factor: Match 19" 700-1500: 0.6; Match 19" 2200/3000: 0.7

## 5.4 Standard features

**Wide AC input voltage window**
Minimises need for battery operation

**Automatic voltage regulation**
The buck and boost function reduces the input voltage variations to acceptable levels for the load.

**Excellent high voltage protection**
Protects itself and the load up to 350Vac.

**True RMS voltage and output power information**
All monitored information is based on real values, not on mean- or estimated values which means accurate information on voltage, load and runtime.

**Battery start**
Allows you to switch on the unit whilst the mains input is absent.

**Output frequency automatically set at 50 or 60 Hz (auto sensing)**
Suitable for 50Hz and 60Hz mains systems.
No risk for wrong frequency on battery mode.

**Sinewave output voltage**
Normal electronic equipment is designed to operate from a true sinewave input. Some loads as frequency controllers or monitors could have problems with a blockshaped output voltage.

**Low "green" power consumption during normal operation**
Saves energy: 100% return on investment in 5 years, compared to other line interactive UPS's

**Superior battery management for maximum battery life and reliability:**

- **Quick advanced battery test**
  UPS keeps running in normal operation while testing the battery, instead of switching to battery operation. This means no risk to interrupt the load if the battery is empty or damaged, or in case of overload.
- **Lowest battery temperature during mains operation**
  The design of the unit resulted in significantly lower battery temperature which increases battery lifetime.
- **Battery charging at 165V input**
  Fast recovery of back up power even in bad mains situation. Increases uptime and battery lifetime.
- **Autocharging**
  Charger is switched on automatically when mains input is present
- **Automatic boost/floatcharger**
  Reduces recharge time to 2 hours without overcharging. Increases uptime.

**Additional standard features for Match 19" 2200/3000:**

**High battery recharge current**
Fast recharging of long runtime versions.

**Deep battery calibration test**
The actual battery capacity can be tested and calibrated ensuring accurate runtime prediction.

**Load dependent end-of-discharge**
Batteries may discharge deeper if the discharge time is shorter. This feature gives maximum runtime at any load, without the risk of damaging the batteries.

# 6 - Communications port: ComConnect

## 6.1 Principles of operation

Located at the back of the unit, the ComConnect is a plug-in interface port (9-pin, Sub-D, male) which enables advanced communication between the UPS and the computer (interface kit required).
The microprocessor controlled ComConnect sends information concerning power levels and UPS condition to the computer or network interface. In the event that batteries are near exhaustion, it sends commands for unattended controlled shutdown of computer systems. The ComConnect can also receive UPS shutdown signals from the computer or network interface.
Please note that the common of the ComConnect is connected to earth.

When signals are sent to the computer, a written message can appear on the screen to inform the user.
Monitored conditions include:

- mains voltage availability
- discharge level of batteries
- temperature of unit (during battery operation)
- interactive control- and diagnostic information for stand-alone and network systems
- current alarm status

Interface kits (cables and/or software) are available for operating systems supporting JAVA and most commonly used network operating systems, including Novell, UNIX, VMS, Windows, IBM AS/400, IBM OS/2, LINUX.
For specific information on GE Digital Energy's connectivity products please contact your local dealer or Internet: www.gedigitalenergy.com.

## 6.2 Pin Functions

Port description: male, 9-pin Sub-D

| Pin # | Function |
|---|---|
| 1 | RS232 input |
| 2 | RS232 output |
| 3 | No function |
| 4 | PnP: Plug and Play |
| 5 | Common, protective earth |
| 6 | No function |
| 7 | Battery low |
| 8 | UPS connected |
| 9 | Mains failure |

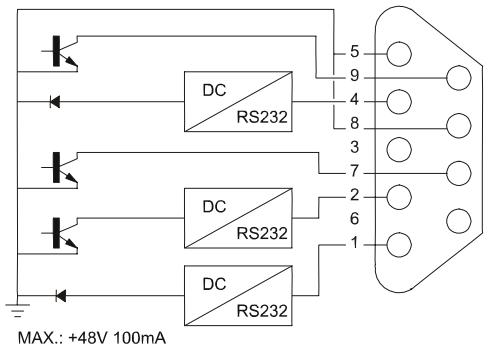


*Figure 4: ComConnect port Match 19" 700-1500*

| Pin # | Function |
|---|---|
| 1 | RS232 input (UPS shutdown) |
| 2 | RS232 output |
| 3 | No function |
| 4 | PnP: Plug and Play |
| 5 | Common |
| 6 | No function |
| 7 | No function |
| 8 | UPS connected |
| 9 | No function |

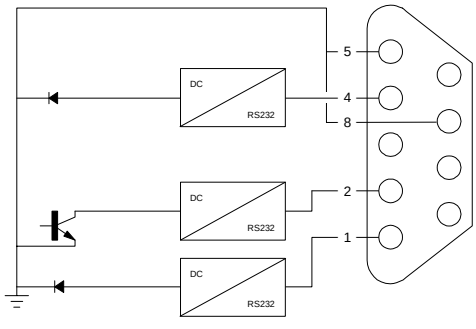


*Figure 5: ComConnect port Match 19" 2200-3000*

The ComConnect port is available even when the UPS is switched off. If no mains is available the ComConnect port is turned off 10 hours after UPS shutdown to save battery energy.

# 7 - Batteries (ratings given for 25 °C)

| **Match 19" model** | : | **700** | **1000** | **1500** | **2200** | **3000** |
|---|---|---|---|---|---|---|
| Nominal voltage (V) | : | 24 | 36 | 36 | 36 | 48 |
| Batteries (number x Ah) | : | 2x7 | 3x7 | 3x12 | 6x7 | 8x7 |
| Battery capacity (Ah) | : | 7 | 7 | 12 | 14 | 14 |
| Type | : | sealed and maintenance free | | | | |
| Service life | : | up to 6 years (depending on operating conditions) | | | | |
| Runtime | : | see section 5.3, Runtimes | | | | |
| Battery recharge current | : | 1.5 A | | | | |
| Match 19" 700-1500 | : | 3A | | | | |
| Match 19" 2200-3000 | : | 3.5 – 10A, depending on programmed battery capacity | | | | |
| Battery recharge time | : | approx. 2 hours for 90% capacity | | | | |

Long term storage: see chapter 9.

# 8 - Options (1000-3000 VA)

## 8.1 SNMP interface card

An SNMP interface card can be placed in the CardConnect slot in the rear panel of the UPS, and allows the data interface to be connected directly to an Ethernet network. When this option is installed the ComProt communication link is no longer available to the user.

## 8.2 Relay interface card

An interface card supporting ComConnect-05 can be placed in the CardConnect slot in the rear panel of the UPS. Potential free change-over contacts are available for the following alarms: mains failure, battery low.
The contacts are wired to a terminal strip and to a 9-pole sub-D connector.

## 8.3 Longer runtimes (2200-3000 VA)

Extended runtime can be obtained by connecting more than one battery module. Using the DC socket of the battery module you can install a second, third etc. battery module.

| Match 19" 2200/3000 with: | Total cap. Ah | Runtime (min.) 100%/50% load |
|---|---|---|
| 1 additional battery module | 28 | 15/36 |
| 2 additional battery modules | 42 | 26/58 |
| 3 additional battery modules | 56 | 37/79 |
| 4 additional battery modules | 70 | 47/101 |

For extended runtime at 25°C ambient temperature no derating is required. For extended runtime at 35°C, maximum load must be derated to 1.85kVA (Match 19" 2200) and 2.5kVA (Match 19" 3000).

## 8.4 DC extension cables

DC extension cables for Match 19" 2200VA and Match 19" 3000VA are available for custom-built long runtime solutions. Please contact your dealer for specific information.

# 9 - Transport / storage

No liability can be accepted for any transport damage when the equipment is shipped in non-original packaging.

Store the UPS in a dry location with the batteries in a fully charged state.
Storage temperature must be within -20 +45 °C. If the unit is stored for a period exceeding 3 months, optimal battery lifetime is obtained if the storage temperature does not exceed 25°C.

If the unit is stored for an extended period of time, the batteries must be recharged periodically. Be sure that the batteries are connected to the UPS. Subsequently connect the unit to a wall outlet and recharge the batteries for 24 hours:

- if the storage temperature is within -20 and +30°C: every 3 months,
- if the storage temperature is within -20 and +45°C: every month.

**A product by:**

GE Consumer & Industrial SA
General Electric Company
CH – 6595 Riazzino (Locarno)
Switzerland
T +41 (0)91 / 850 51 51
F +41 (0)91 / 850 51 44
E gedeinfo@ge.com

www.gedigitalenergy.com